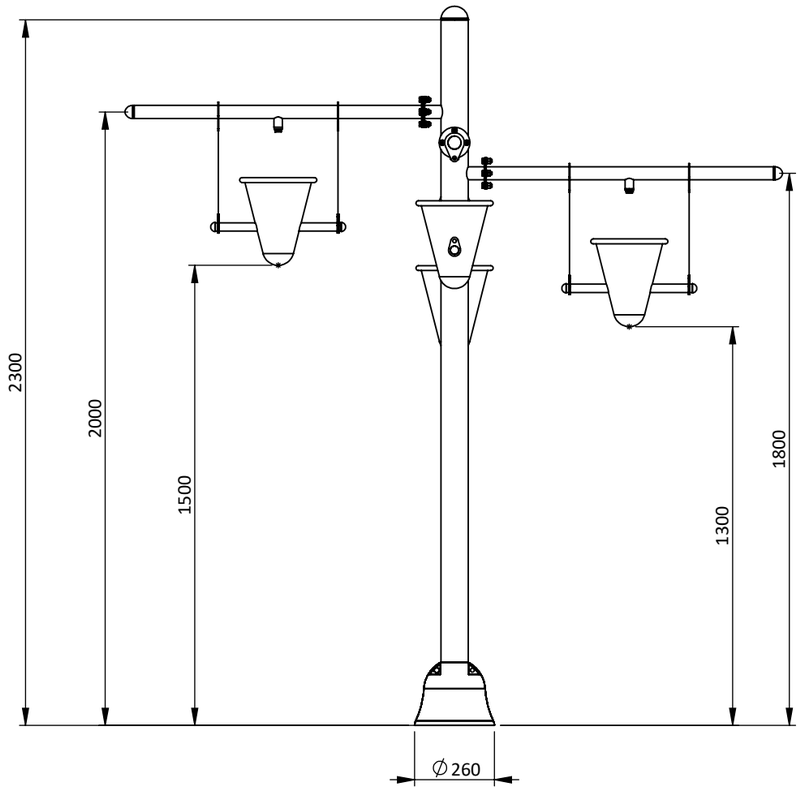

Front
Scale 1:20

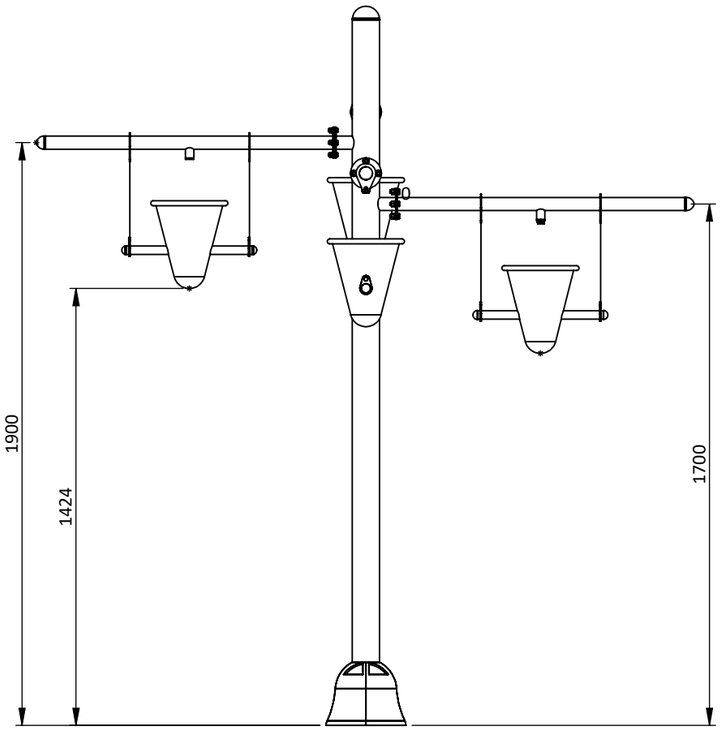

Right
Scale 1:20

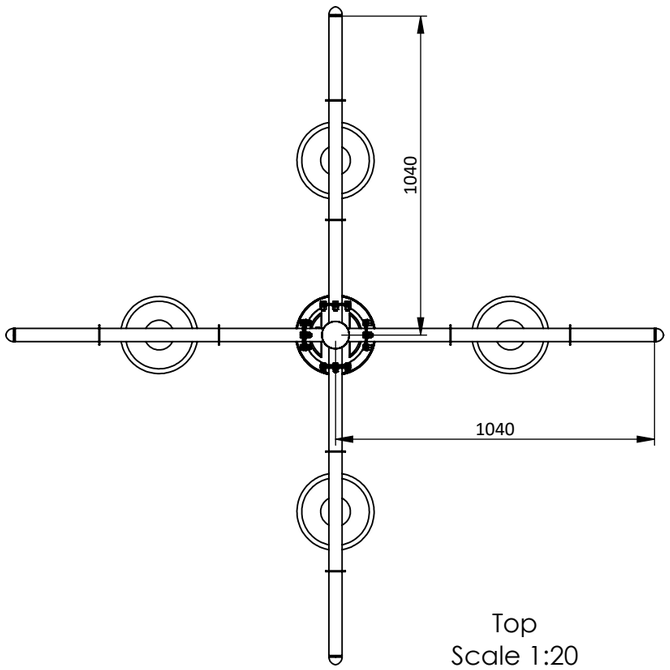

Top
Scale 1:20

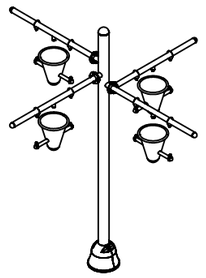

PROJECT: Water Play	Materials: STEEL	Finish:	Qty: 1	Weight(kg.):	Unless Otherwise Stated: Linear Tol.: ±0.2, Angular Tol.: 0°15' Surface Finish: 0.8µm All Dimensions: mm
Customer:	Part Name: Funnel of Water				
Projection Method: THIRD ANGLE	Sheet Size: A3	Part Number: FW-00	Date: 27/11/2020		
		Design by:	Page No.:	Revision: 0	

K2J
92/299 The Plant Citi Changwattana Soi 15, Popular Rd., Banmai, Pakkrat,Nontaburi,11120
www.k2jdesign.com

This drawing and any information or descriptive material set out on it are the confidential and copyright propertyof **K2J Company Limited**. © and MUST NOT BE DISCLOSED, COPIED, LOANED in whole or part or used for any purpose without the written permission of **K2J Company Limited**.